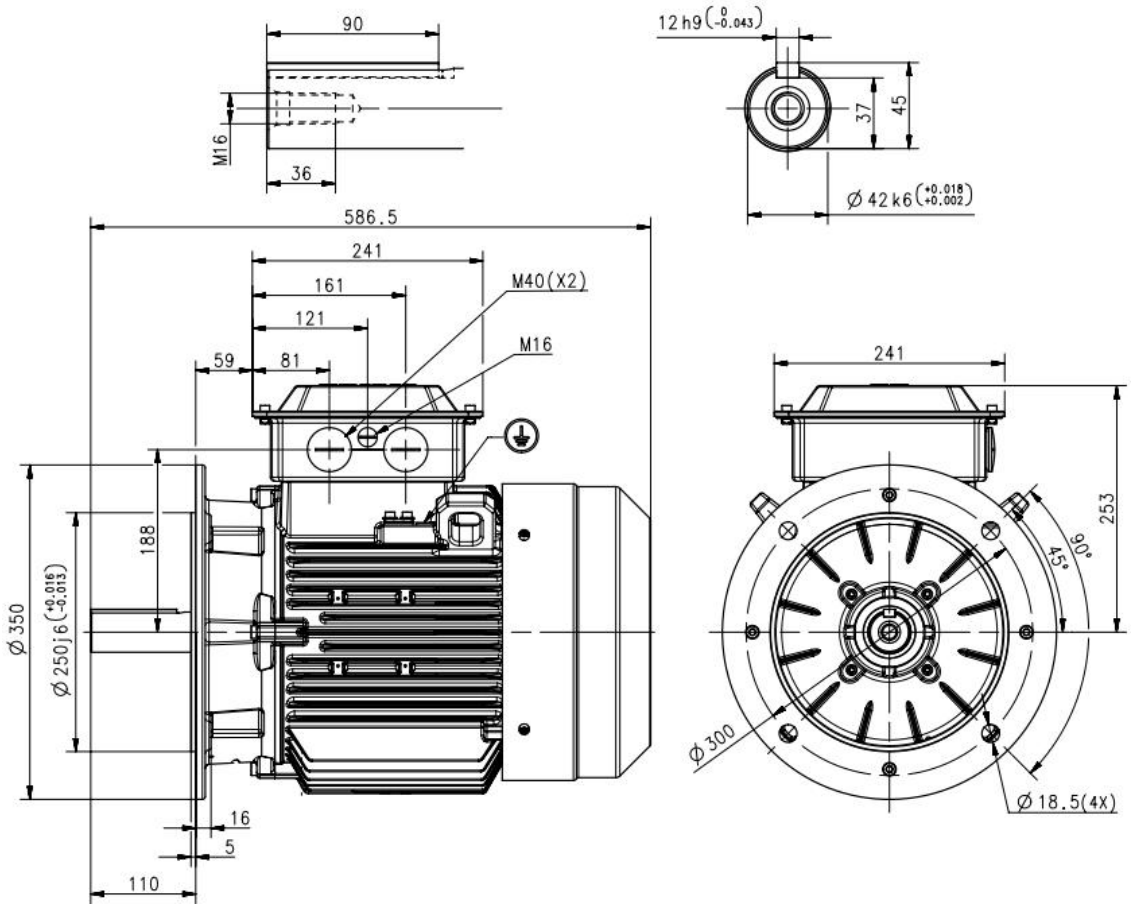

Additional information:

Dimension Print	Motor Type: M2BAX 160MLA2 160MLA4 160MLA6 160MLB2 160MLB4 160MLC2 B5, V1, V3	Document No: 3GZC500016-9 E 13 BA 160 A
Description: STANDARD SQUIRREL CAGE MOTOR		

Unit:	ABB Motors and Generators	Issued by:	Bin Zou	Replaces:
Date:	2015-08-11	Approved by:	Anna Feng	Replaced by:

ABB Ltd.	Customer Reference:	ABB